LA ETSF

Power TOPLED®

PowerTOPLED, a powerful member of the TOPLED family. Thanks to their high luminous efficacy, the LEDs are ideal for rear light clusters and indicators on vehicles and for display panels for traffic control systems.

Applications

- Interior Illumination (e.g. Ambient Map)
- Signalling
- Traffic Lights

Features:

- Package: white PLCC-4 package, colorless clear resin
- Chip technology: Thinfilm
- Typ. Radiation: 120° (Lambertian emitter)
- Color: λ_{dom} = 617 nm (● amber)
- Corrosion Robustness Class: 3B
- ESD: 2 kV acc. to ANSI/ESDA/JEDEC JS-001 (HBM)

Ordering Information

Type	Luminous Intensity [1] I_F = 50 mA I_v	Ordering Code
LA ETSF-BADB-24-1	1800 ... 7100 mcd	Q65112A9439

Maximum Ratings

Parameter	Symbol		Values
Operating Temperature	T_{op}	min. max.	-40 °C 110 °C
Storage Temperature	T_{stg}	min. max.	-40 °C 110 °C
Junction Temperature	T_j	max.	125 °C
Junction Temperature for short time applications*	T_j	max.	150 °C
Forward current T_S = 25 °C	I_F	max.	70 mA
Surge Current t ≤ 10 µs; D = 0.005 ; T_S = 25 °C	I_{FS}	max.	100 mA
Reverse voltage [2)] T_S = 25 °C	V_R	max.	12 V
ESD withstand voltage acc. to ANSI/ESDA/JEDEC JS-001 (HBM)	V_{ESD}		2 kV

* The median lifetime (L70/B50) for Tj = 150°C is 100h.

Characteristics

I_F = 50 mA; T_S = 25 °C

Parameter	Symbol		Values
Peak Wavelength	λ_{peak}	typ.	624 nm
Dominant Wavelength [3)] I_F = 50 mA	λ_{dom}	min. typ. max.	612 nm 617 nm 624 nm
Spectral Bandwidth at 50% $I_{rel,max}$	$\Delta\lambda$	typ.	18 nm
Viewing angle at 50% I_V	2φ	typ.	120 °
Forward Voltage [4)] I_F = 50 mA	V_F	min. typ. max.	1.90 V 2.15 V 2.50 V
Reverse current [2)] V_R = 12 V	I_R	typ. max.	0.01 µA 10 µA
Temperature Coefficient of Peak Wavelength -10°C ≤ T ≤ 100°C	$TC_{\lambda peak}$	typ.	0.14 nm / K
Real thermal resistance junction/solderpoint [5)]	$R_{thJS\ real}$	typ. max.	70 K / W 95 K / W
Electrical thermal resistance junction/solderpoint [5)] with efficiency η_e = 29 %	$R_{thJS\ elec.}$	typ. max.	50 K / W 67 K / W

Brightness Groups

Group	Luminous Intensity [1] I_F = 50 mA min. I_v	Luminous Intensity. [1] I_F = 50 mA max. I_v	Luminous Flux [6] I_F = 50 mA typ. Φ_V
BA	1800 mcd	2240 mcd	6060 mlm
BB	2240 mcd	2800 mcd	7560 mlm
CA	2800 mcd	3550 mcd	9530 mlm
CB	3550 mcd	4500 mcd	12080 mlm
DA	4500 mcd	5600 mcd	15150 mlm
DB	5600 mcd	7100 mcd	19050 mlm

Forward Voltage Groups

Group	Forward Voltage [4] I_F = 50 mA min. V_F	Forward Voltage [4] I_F = 50 mA max. V_F
3A	1.90 V	2.05 V
3B	2.05 V	2.20 V
4A	2.20 V	2.35 V
4B	2.35 V	2.50 V

Wavelength Groups

Group	Dominant Wavelength [3] I_F = 50 mA min. λ_{dom}	Dominant Wavelength [3] I_F = 50 mA max. λ_{dom}
2	612 nm	616 nm
3	616 nm	620 nm
4	620 nm	624 nm

Group Name on Label

Example: BA-2-3A

Brightness	Wavelength	Forward Voltage
BA	2	3A

Relative Spectral Emission [6)]

$I_{rel} = f(\lambda)$; $I_F = 50$ mA; $T_S = 25$ °C

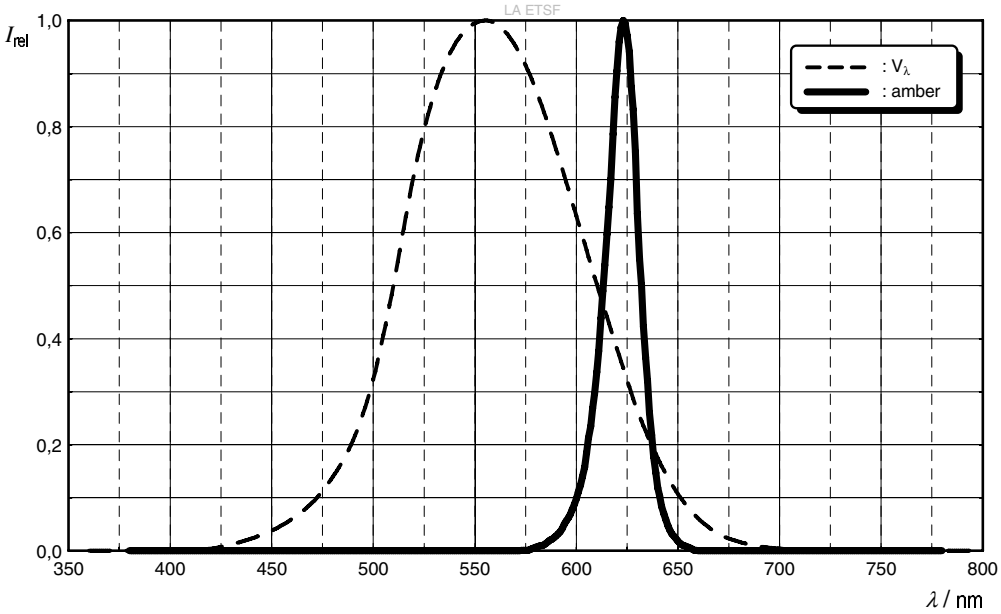

Radiation Characteristics [6)]

$I_{rel} = f(\phi)$; $T_S = 25$ °C

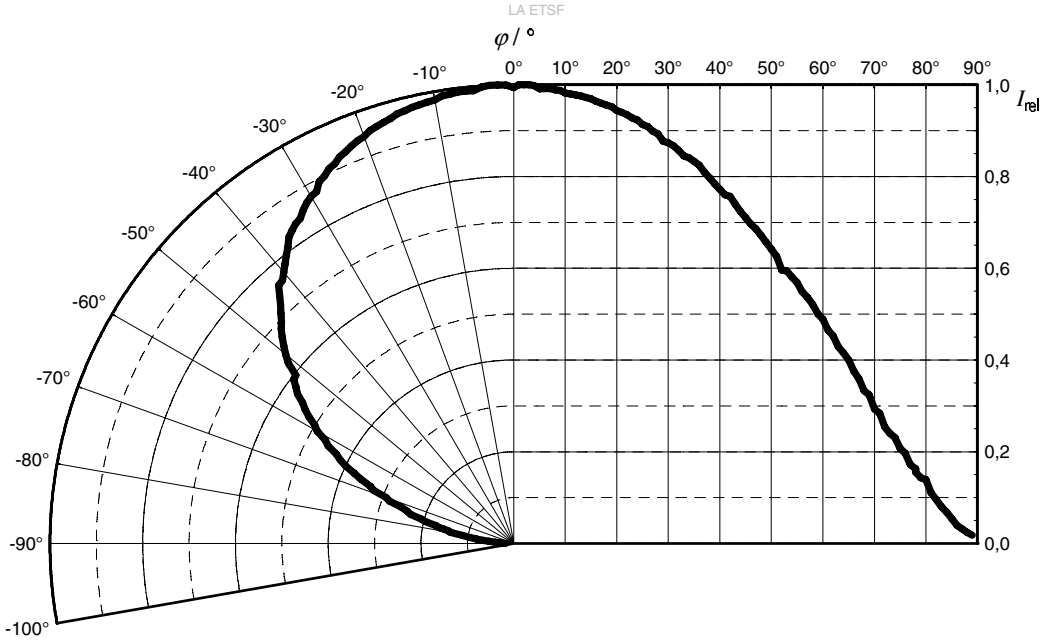

OSRAM
Opto Semiconductors

Forward current 6), 7)

$I_F = f(V_F)$; T_S = 25 °C

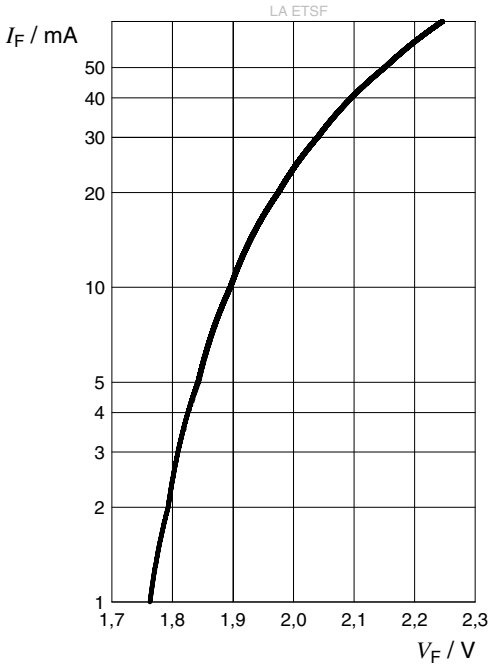

Relative Luminous Intensity 6), 7)

$I_v/I_v(50\ mA) = f(I_F)$; T_S = 25 °C

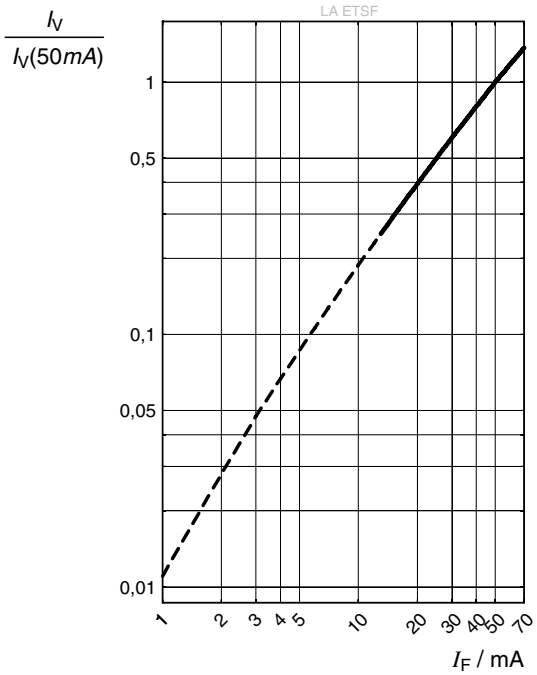

OSRAM
Opto Semiconductors

Forward Voltage [6)]

$\Delta V_F = V_F - V_F(25\ °C) = f(T_j);\ I_F = 50\ mA$

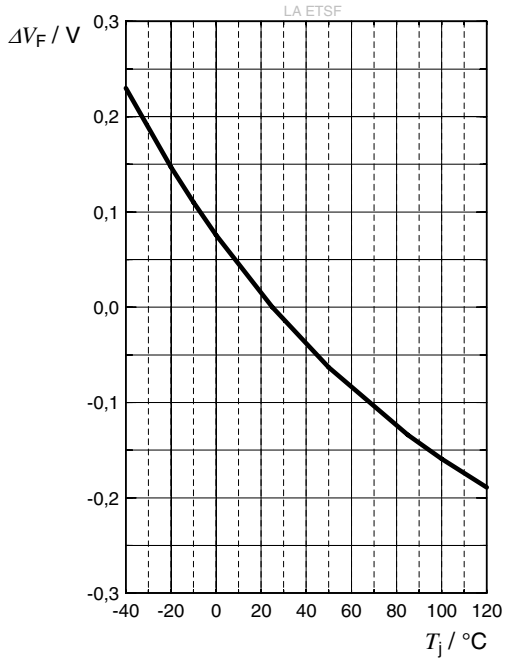

Relative Luminous Intensity [6)]

$I_v/I_v(25\ °C) = f(T_j);\ I_F = 50\ mA$

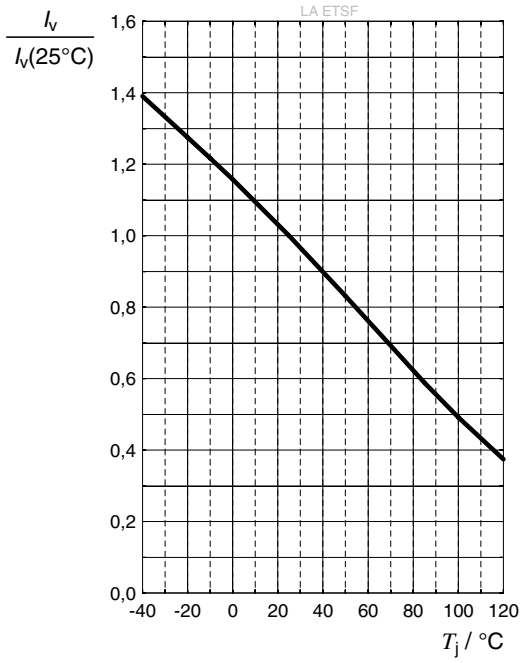

Dominant Wavelength [6)]

$\Delta\lambda_{dom} = \lambda_{dom} - \lambda_{dom}(25\ °C) = f(T_j);\ I_F = 50\ mA$

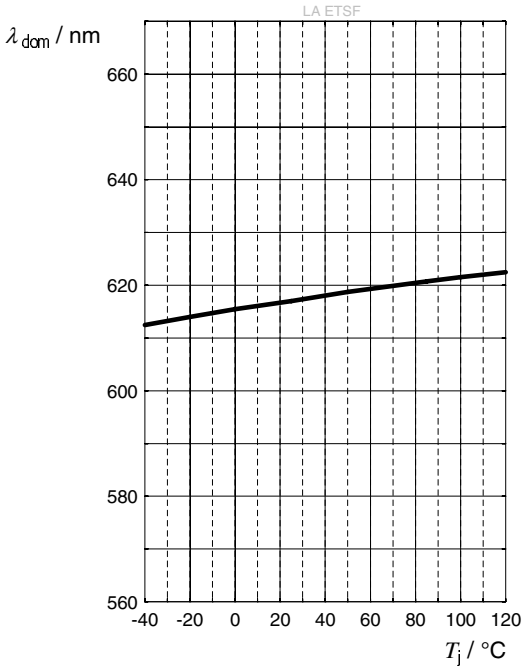

OSRAM
Opto Semiconductors

Max. Permissible Forward Current

$I_F = f(T)$

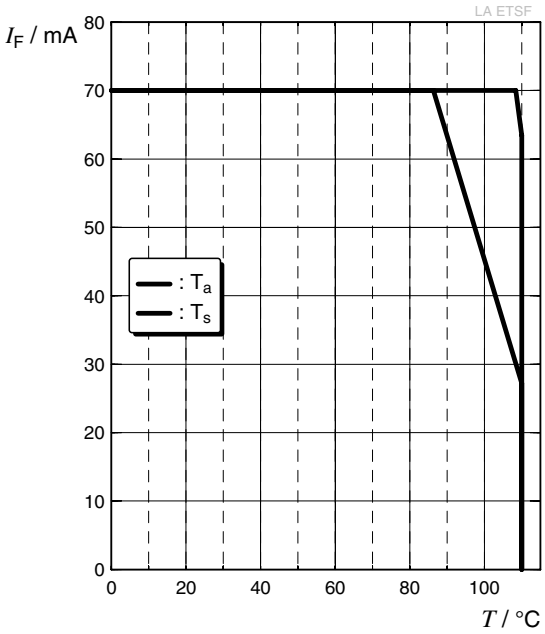

Permissible Pulse Handling Capability

$I_F = f(t_p)$; D: Duty cycle

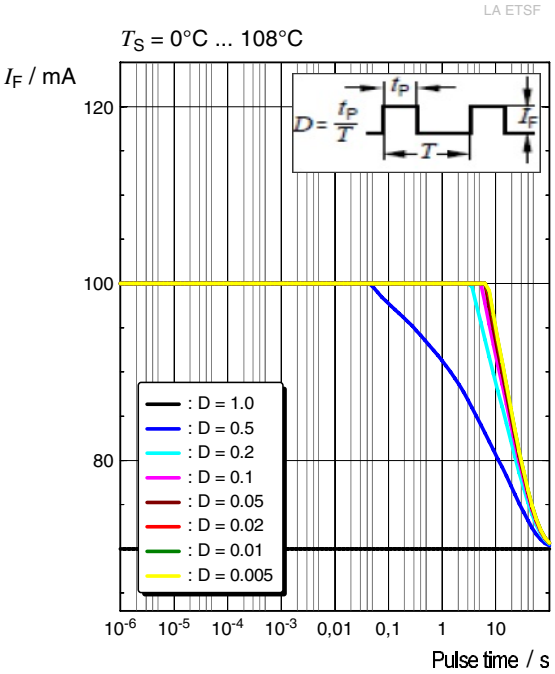

Permissible Pulse Handling Capability

$I_F = f(t_p)$; D: Duty cycle

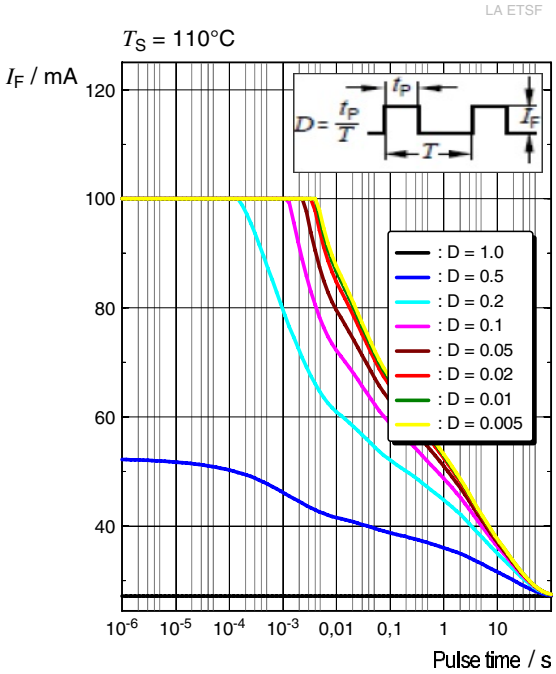

OSRAM
Opto Semiconductors

Dimensional Drawing [8)]

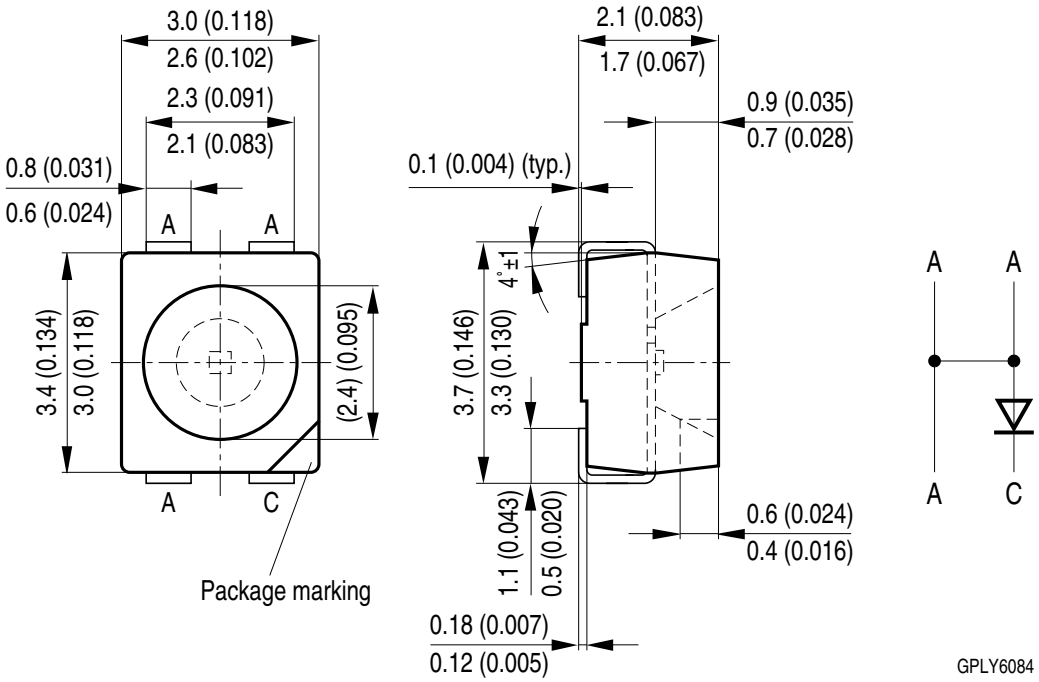

Further Information

Approximate Weight: 30.0 mg

Package marking: Cathode

Corrosion test: Class: 3B
Test condition: 40°C / 90 % RH / 15 ppm H_2S / 14 days (stricter than IEC 60068-2-43)

OSRAM
Opto Semiconductors

Recommended Solder Pad [8)]

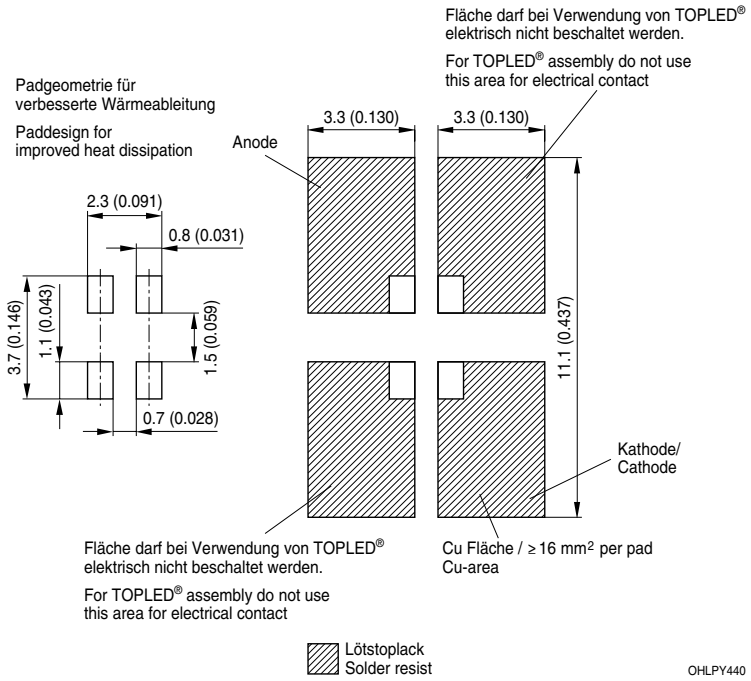

For superior solder joint connectivity results we recommend soldering under standard nitrogen atmosphere. Package not suitable for ultra sonic cleaning.

Reflow Soldering Profile

Product complies to MSL Level 2 acc. to JEDEC J-STD-020E

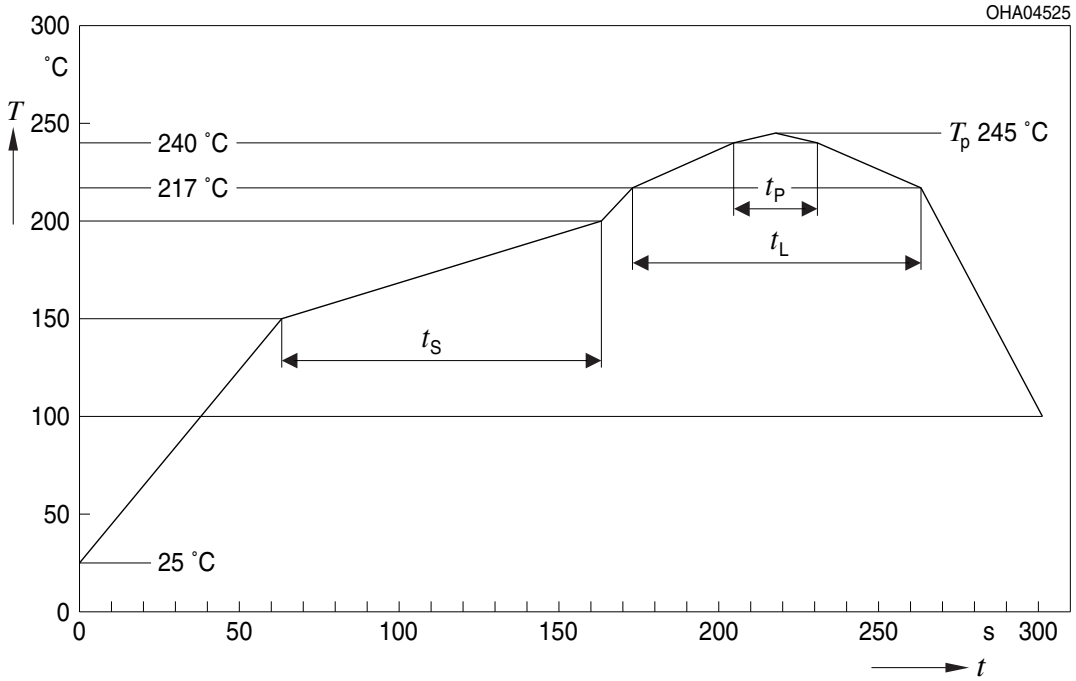

Profile Feature	Symbol	Pb-Free (SnAgCu) Assembly			Unit
		Minimum	Recommendation	Maximum	
Ramp-up rate to preheat*) 25 °C to 150 °C			2	3	K/s
Time t_S T_{Smin} to T_{Smax}	t_S	60	100	120	s
Ramp-up rate to peak*) T_{Smax} to T_P			2	3	K/s
Liquidus temperature	T_L		217		°C
Time above liquidus temperature	t_L		80	100	s
Peak temperature	T_P		245	260	°C
Time within 5 °C of the specified peak temperature T_P - 5 K	t_P	10	20	30	s
Ramp-down rate* T_P to 100 °C			3	6	K/s
Time 25 °C to T_P				480	s

All temperatures refer to the center of the package, measured on the top of the component
* slope calculation DT/Dt: Dt max. 5 s; fulfillment for the whole T-range

Taping [8)]

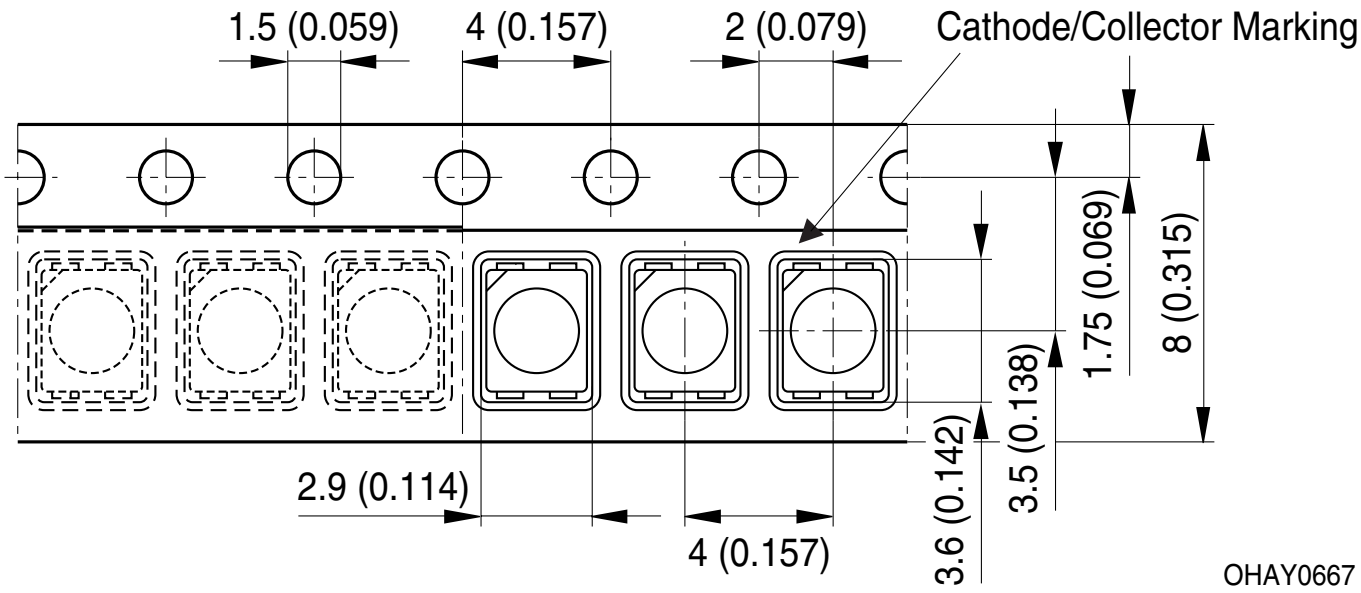
1.5 (0.059)
4 (0.157)
2 (0.079)
Cathode/Collector Marking
1.75 (0.069)
8 (0.315)
3.5 (0.138)
3.6 (0.142)
2.9 (0.114)
4 (0.157)
OHAY0667

Tape and Reel [9)]

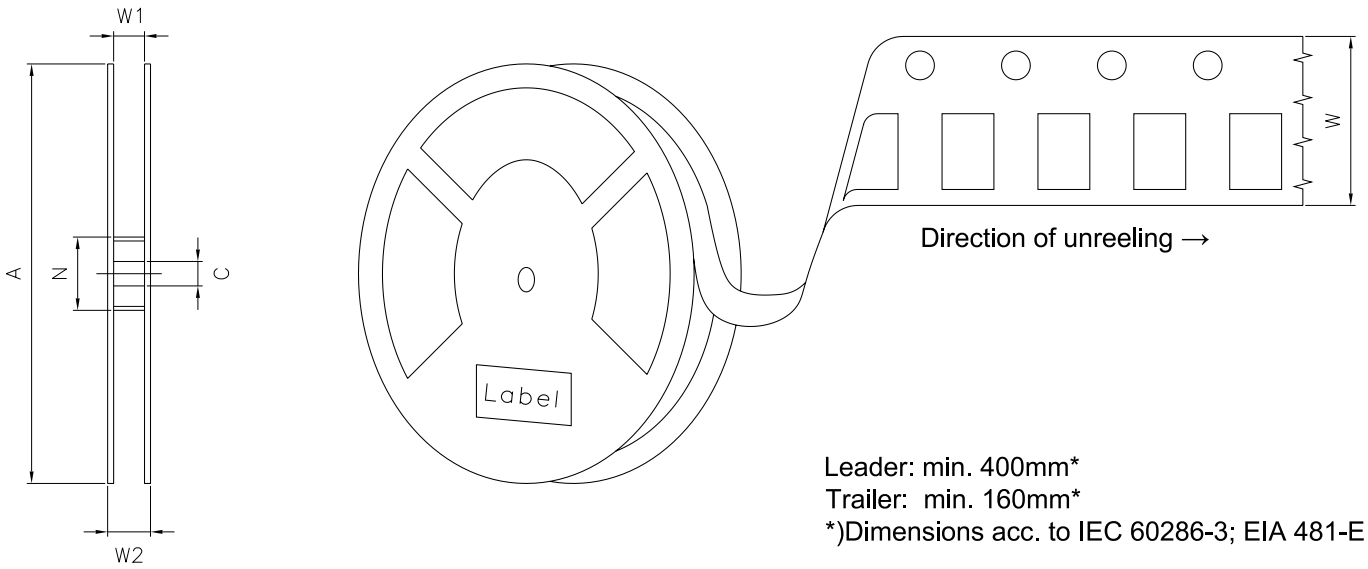

Leader: min. 400mm*
Trailer: min. 160mm*
*)Dimensions acc. to IEC 60286-3; EIA 481-E

Reel Dimensions

A	W	N_{min}	W_1	$W_{2\,max}$	Pieces per PU
180 mm	8 + 0.3 / - 0.1 mm	60 mm	8.4 + 2 mm	14.4 mm	2000
330 mm	8 + 0.3 / - 0.1 mm	60 mm	8.4 + 2 mm	14.4 mm	8000

OSRAM
Opto Semiconductors

Barcode-Product-Label (BPL)

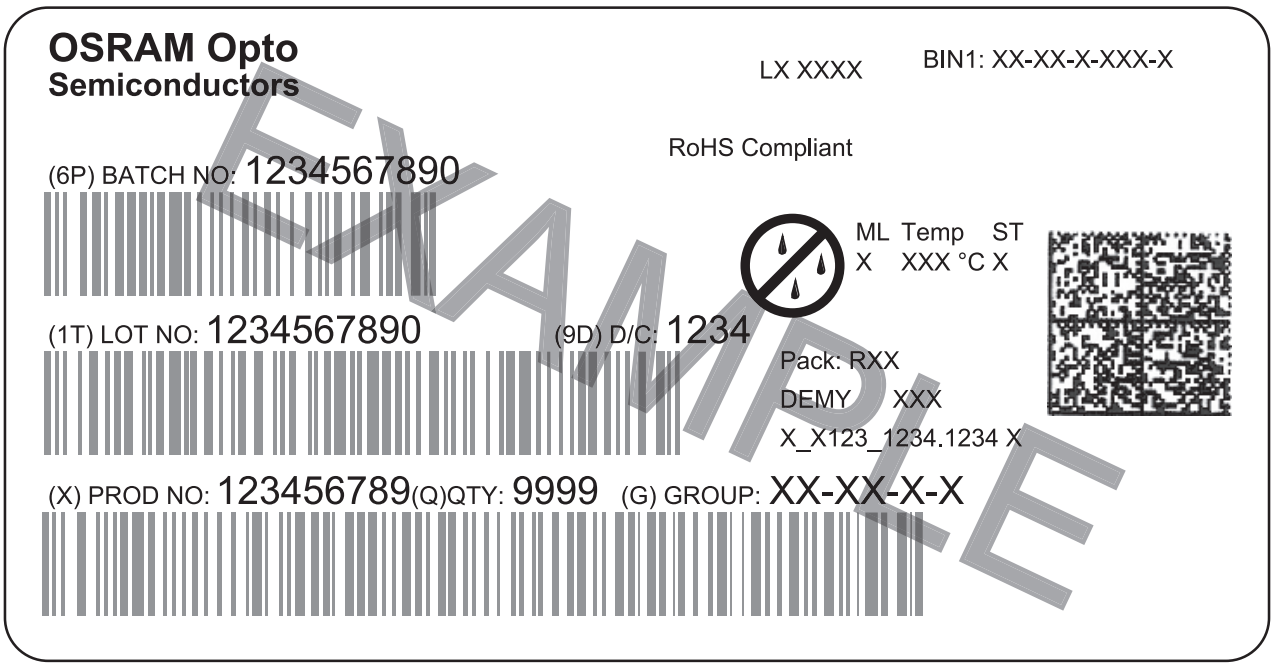

OHA04563

Dry Packing Process and Materials [8)]

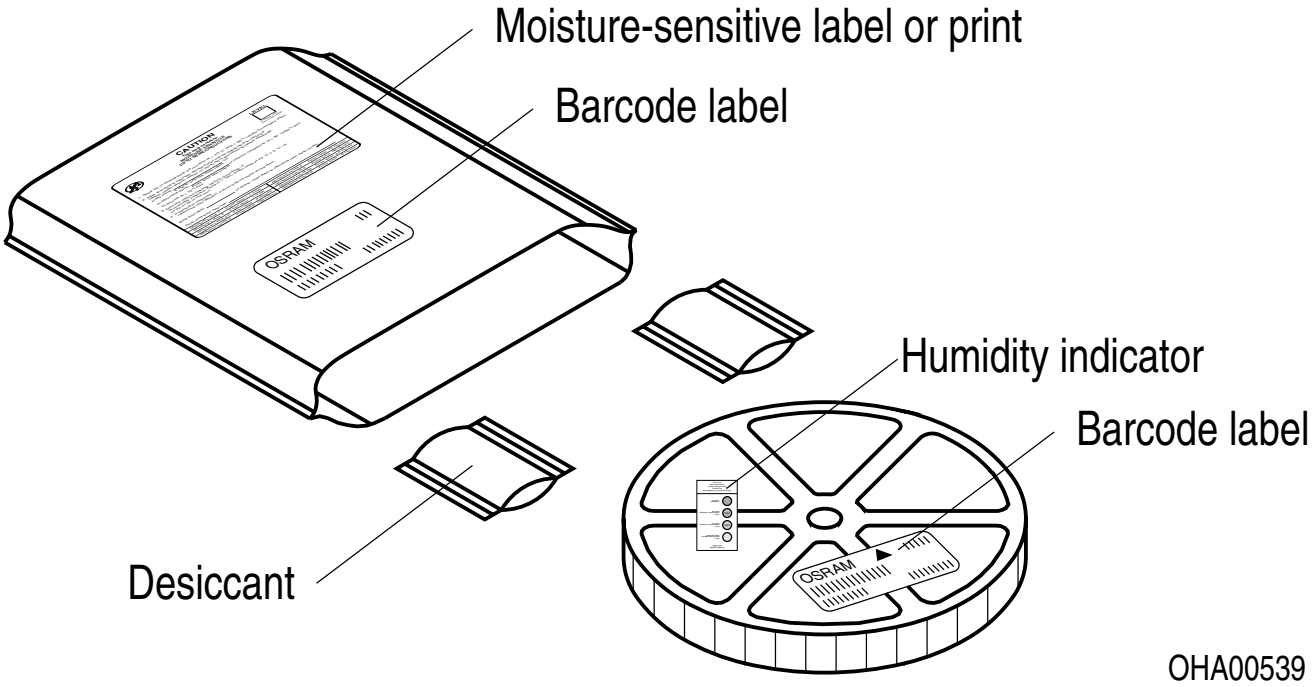

Moisture-sensitive product is packed in a dry bag containing desiccant and a humidity card according JEDEC-STD-033.

Schematic Transportation Box [8)]

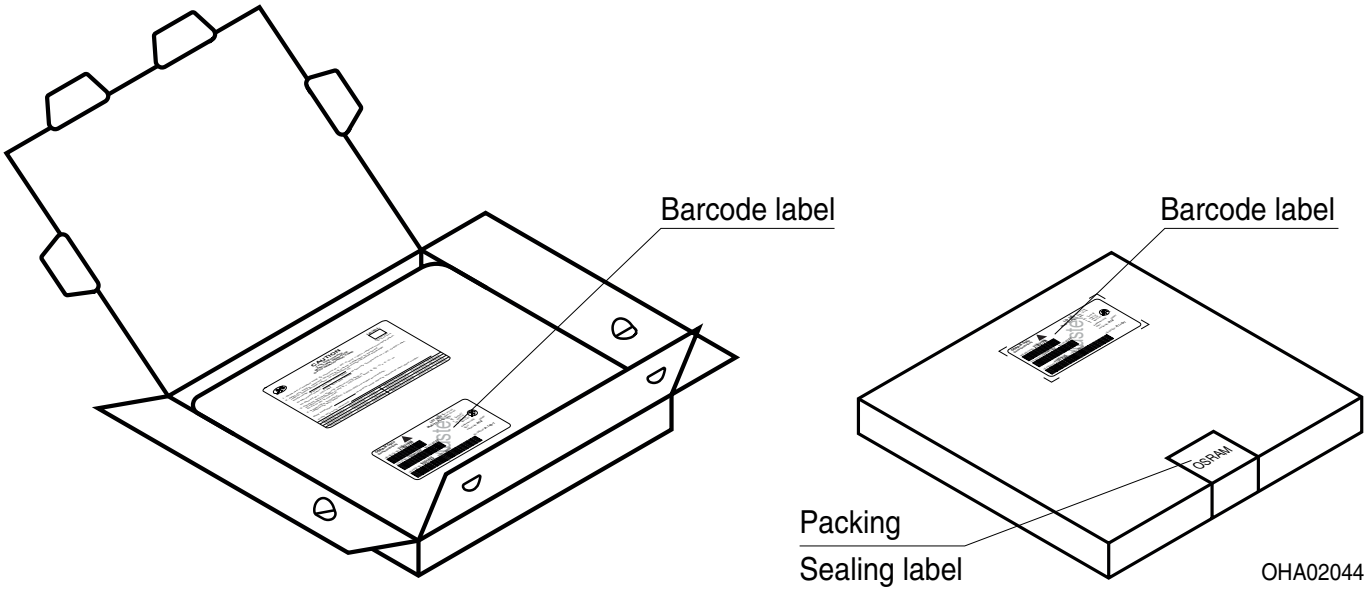

Dimensions of Transportation Box

Width	Length	Height
200 ± 5 mm	195 ± 5 mm	30 ± 5 mm
352 ± 5 mm	352 ± 5 mm	33 ± 5 mm

OSRAM
Opto Semiconductors

Type Designation System

Wavelength (λ_{dom} typ.)

A:	617 nm	amber
S:	633 nm	super red
T:	528 nm	true green
Y:	587 nm	yellow
O:	606 nm	orange
CP/P:	560 nm	pure green
R:	625 nm	red
B:	470 nm	blue

Emission Color

Color coordinates according CIE 1931/Emission color:

W:	white
UW:	ultra white
CW:	warm white
CB:	color on demand blue
CR:	crystal pink

Package Type

E: PowerTOPLED

L: Light emitting diode

L	A		E	6	7	6

Lead / Package Properties

6: folded leads

T: folded leads, improved corrosion stability (Au-LF), w/o TiO2 jetting

Encapsulant Type / Lens Properties

7: Colorless clear or white volume conversion (resin encapsulation)

S: Silicone (with or without diffuser)

3: lens 30° … 70°

5: lens 40° .. 80°

Chip Technology:

5: HOP 2000

B: HOP 2000

C: ATON

D: Low cost ThinGaN/ Thinfilm (e.g. 6mil)

F: Thinfilm InGaAlP

G: ThinGaN(Thinfilm InGaN) (Subcon:Sapphire)

Notes

The evaluation of eye safety occurs according to the standard IEC 62471:2006 (photo biological safety of lamps and lamp systems). Within the risk grouping system of this IEC standard, the device specified in this data sheet falls into the class **exempt group (exposure time 10000 s)**. Under real circumstances (for exposure time, conditions of the eye pupils, observation distance), it is assumed that no endangerment to the eye exists from these devices. As a matter of principle, however, it should be mentioned that intense light sources have a high secondary exposure potential due to their blinding effect. When looking at bright light sources (e.g. headlights), temporary reduction in visual acuity and afterimages can occur, leading to irritation, annoyance, visual impairment, and even accidents, depending on the situation.

Subcomponents of this device contain, in addition to other substances, metal filled materials including silver. Metal filled materials can be affected by environments that contain traces of aggressive substances. Therefore, we recommend that customers minimize device exposure to aggressive substances during storage, production, and use. Devices that showed visible discoloration when tested using the described tests above did show no performance deviations within failure limits during the stated test duration. Respective failure limits are described in the IEC60810.

For further application related information please visit www.osram-os.com/appnotes

Disclaimer

Attention please!
The information describes the type of component and shall not be considered as assured characteristics. Terms of delivery and rights to change design reserved. Due to technical requirements components may contain dangerous substances.
For information on the types in question please contact our Sales Organization.
If printed or downloaded, please find the latest version on the OSRAM OS website.

Packing
Please use the recycling operators known to you. We can also help you – get in touch with your nearest sales office. By agreement we will take packing material back, if it is sorted. You must bear the costs of transport. For packing material that is returned to us unsorted or which we are not obliged to accept, we shall have to invoice you for any costs incurred.

Product and functional safety devices/applications or medical devices/applications
OSRAM OS components are not developed, constructed or tested for the application as safety relevant component or for the application in medical devices.
OSRAM OS products are not qualified at module and system level for such application.

In case buyer – or customer supplied by buyer – considers using OSRAM OS components in product safety devices/applications or medical devices/applications, buyer and/or customer has to inform the local sales partner of OSRAM OS immediately and OSRAM OS and buyer and /or customer will analyze and coordinate the customer-specific request between OSRAM OS and buyer and/or customer.

Glossary

1) **Brightness:** Brightness values are measured during a current pulse of typically 25 ms, with an internal reproducibility of ±8 % and an expanded uncertainty of ±11 % (acc. to GUM with a coverage factor of k = 3).

2) **Reverse Operation:** Reverse Operation of 10 hours is permissible in total. Continuous reverse operation is not allowed.

3) **Wavelength:** The wavelength is measured at a current pulse of typically 25 ms, with an internal reproducibility of ±0.5 nm and an expanded uncertainty of ±1 nm (acc. to GUM with a coverage factor of k = 3).

4) **Forward Voltage:** The forward voltage is measured during a current pulse of typically 8 ms, with an internal reproducibility of ±0.05 V and an expanded uncertainty of ±0.1 V (acc. to GUM with a coverage factor of k = 3).

5) **Thermal Resistance:** Rth max is based on statistic values (6σ).

6) **Typical Values:** Due to the special conditions of the manufacturing processes of semiconductor devices, the typical data or calculated correlations of technical parameters can only reflect statistical figures. These do not necessarily correspond to the actual parameters of each single product, which could differ from the typical data and calculated correlations or the typical characteristic line. If requested, e.g. because of technical improvements, these typ. data will be changed without any further notice.

7) **Characteristic curve:** In the range where the line of the graph is broken, you must expect higher differences between single devices within one packing unit.

8) **Tolerance of Measure:** Unless otherwise noted in drawing, tolerances are specified with ±0.1 and dimensions are specified in mm.

9) **Tape and Reel:** All dimensions and tolerances are specified acc. IEC 60286-3 and specified in mm.

Revision History

Version	Date	Change
1.5	2019-08-06	Ordering Information Brightness Groups

Published by OSRAM Opto Semiconductors GmbH
Leibnizstraße 4, D-93055 Regensburg
www.osram-os.com © All Rights Reserved.

EU RoHS and China RoHS compliant product

此产品符合欧盟 RoHS 指令的要求；
按照中国的相关法规和标准，不含有毒有害物质或元素。

OSRAM
Opto Semiconductors